42-630 Series
Gerber Classics
Wall Mount Two Handle Kitchen Faucet

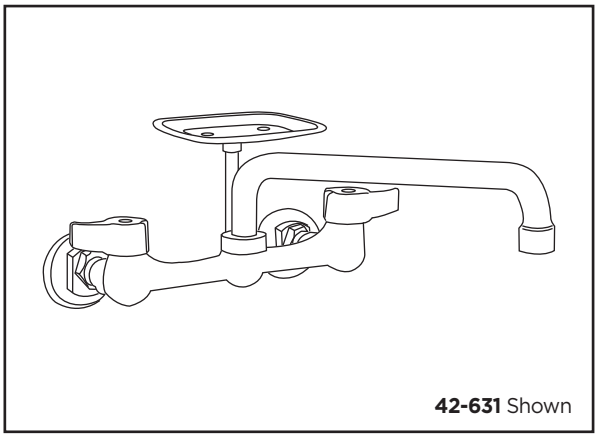

42-631 Shown

Features:
- Cast brass body
- 8″ or 12″ swing spout
- Spout interchangeable with other Gerber spouts
- Threaded escutcheons
- Soap dish (optional)
- Compression stems with renewable brass seats
- 8″ centers for mounting 3 1″ for adjustment
- ADA compliant handles operate with less than 5 lbs. force

Standards & Certifications:
- ASME A112.18.1M
- ICC/ANSI A117.1
- IAPMO/cUPC
- MASS code

Catalog Numbers:
42-630 12″ Spout, Less Soap Dish
42-631 12″ Spout, With Soap Dish
42-690 8″ Spout, Less Soap Dish
42-691 8″ Spout, With Soap Dish

Prefixes Available:
None

Suffixes Available:
None

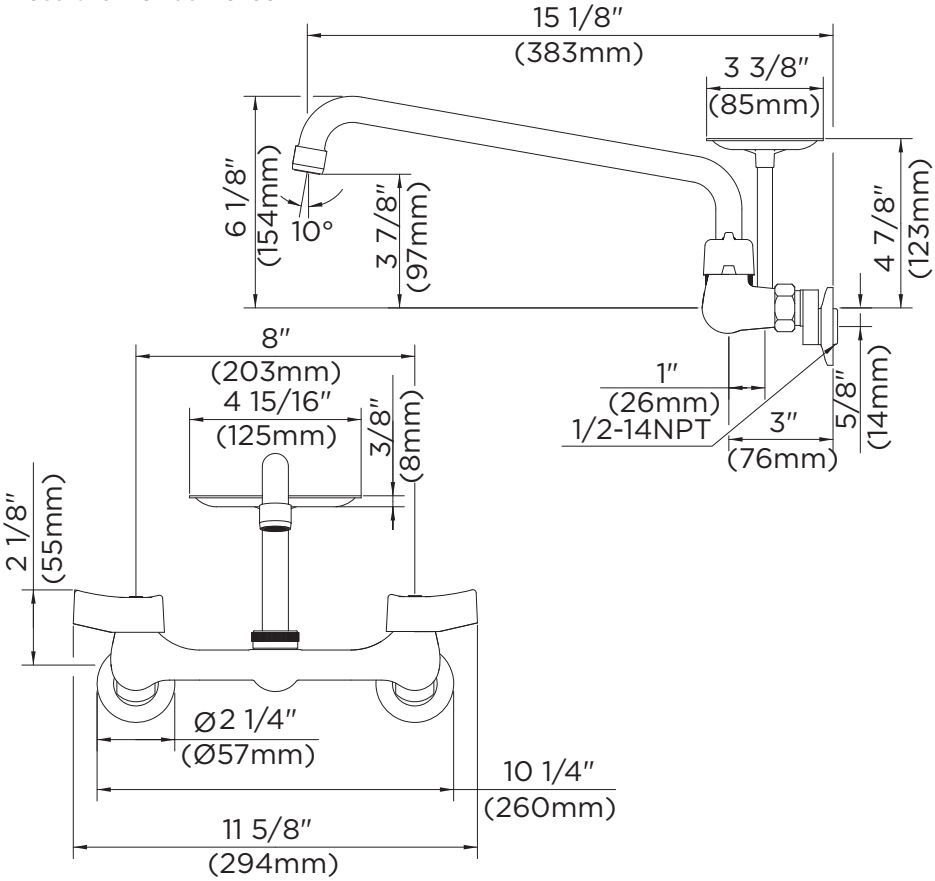

Job Name	
Date	
Model Specified	
Quantity	
Customer	
Contractor	
Architect/engineer	

Gerber Toll Free Technical Support: 888-648-6466
www.gerberonline.com