42-406 Series
Gerber Classics
Two Handle Kitchen Faucet

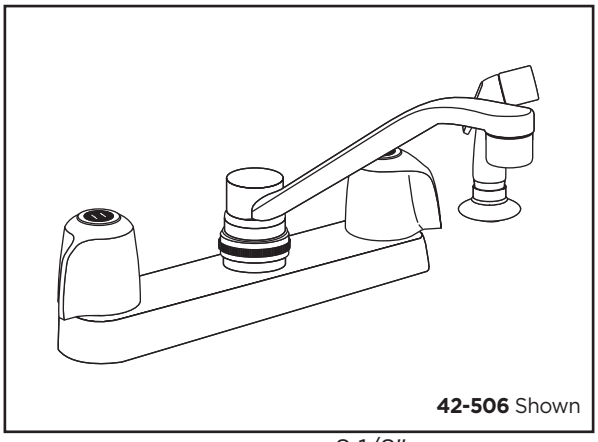

42-506 Shown

Features:

- Cast brass underbody with heavy chrome plated brass shell
- Metal handles with acrylic hot and cold index buttons
- Compression stems with renewable brass seats
- Working parts can be easily replaced
- 8″ D-Tube spout
- 8″ centers for mounting
- 2.2 gpm (8.3 L/min) @ 60 psi maximum aerator
- 1/2″ NPSM supply connections with brass coupling nuts
- ADA compliant handles operate with less than 5 lbs. force

Standards & Certifications:

- ASME A112.18.1M
- NSF/ANSI 372
- ICC/ANSI A117.1
- IAPMO/cUPC
- MASS code

Catalog Numbers:

42-406	Less Spray, Metal Handles
07-42-406	Less Spray, Metal Fluted Handles
42-506	With Spray, Metal Handles

Prefixes Available:

07- Metal Fluted Handle

Suffixes Available:

None

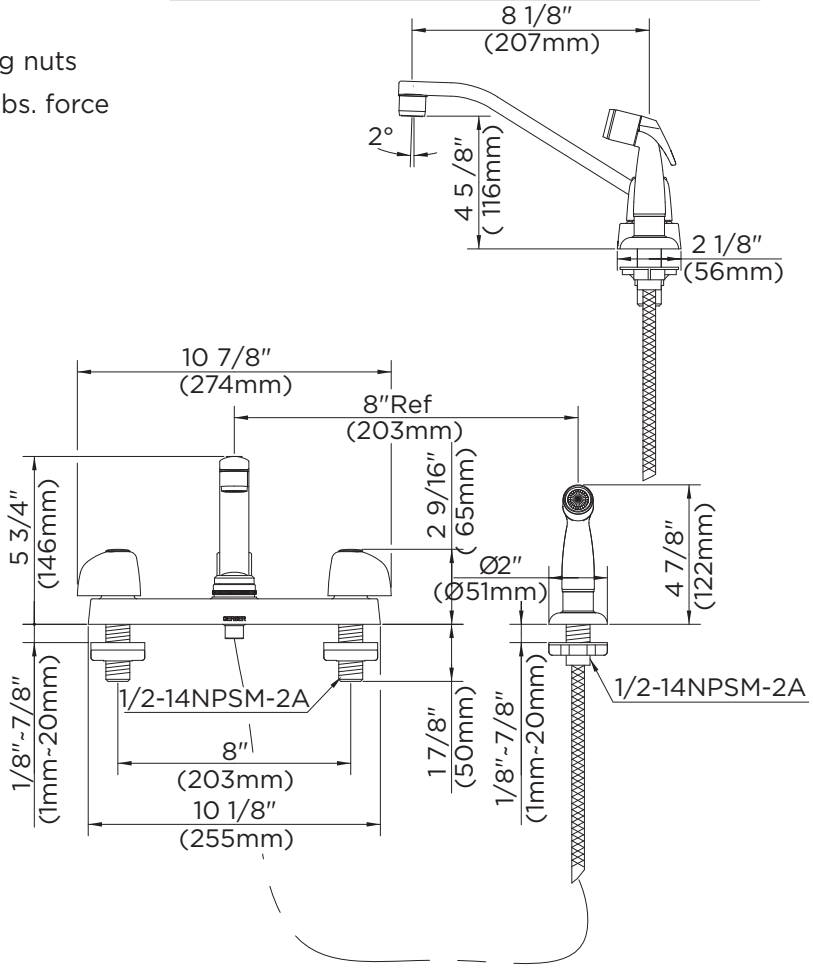

Job Name	
Date	
Model Specified	
Quantity	
Customer	
Contractor	
Architect/engineer	

Gerber Toll Free Technical Support: 888-648-6466
www.gerberonline.com

Because we are committed to continual product improvement, specifications are subject to change without notice.